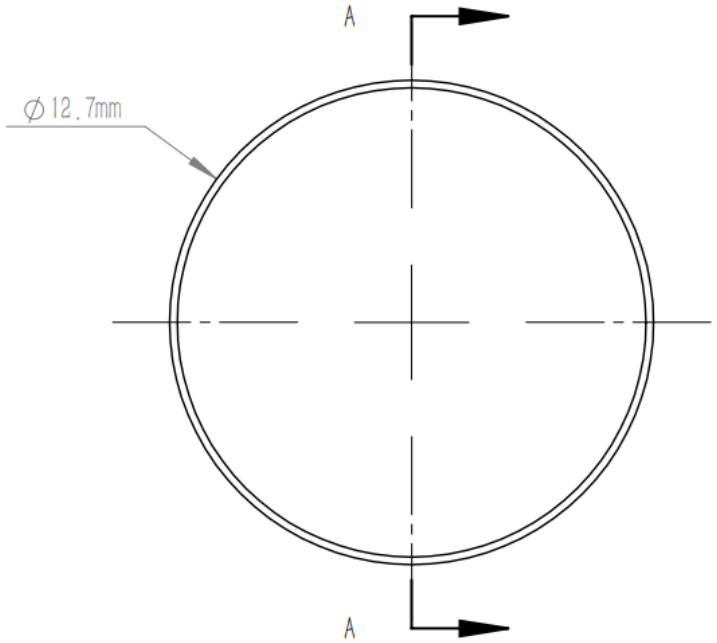

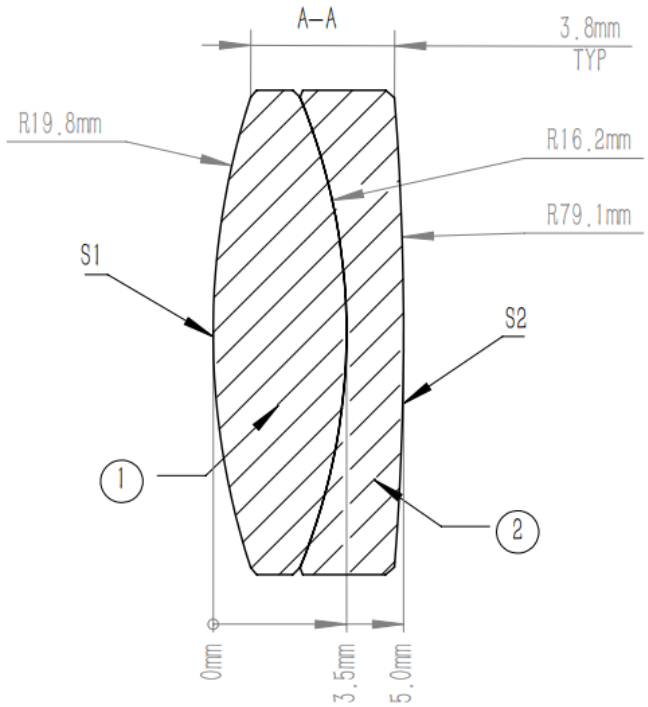

1. DESIGN WAVELENGTH: 706.5 nm,855.0 nm & 1015.0 nm
2. CLEAR APERTURE: >90%CA
3. OPERATION WAVELENGTH: 700 nm–1100 nm
4. DIAMETER TOLERANCE: +0.0/−0.1 mm
5. THICKNESS TOLERANCE: ±0.1 mm
6. FOCAL LENGTH: 30.0 mm±1%@855.0 nm
7. BACK FOCAL LENGTH(REF): 27.3 mm
8. SURFACE QUALITY(S/D)(S1.S2): 40/20
9. SURFACE POWER(S1,S2): 3λ/2@632.8 nm
10. SURFACE IRREGULARITY(S1,S2): λ/4@632.8 nm
11. CENTRATION: <3 arcmin
12. CHAMFER: <0.2 mm,45°
13. COATING(S1,S2): AR COATING Ravg<0.5%@700 nm–1100 nm

DRAWING PROJECTION			ZAC127-030-B	Zolix		
	NAME	DATE				
DRAWN	JAC	18th/JUL./2025	ACHROMATIC DOUBLETS	MATERIAL	WEIGHT	SCALE	REV
APPROVAL	OLI	18th/JUL./2025		FOLLOW THE PARTS		5:1	1.0
THE DRAWINGS ARE ONLY FOR TYPE SELECTION INFORMATION				shop.zolix.com.cn			